BK-6-Q

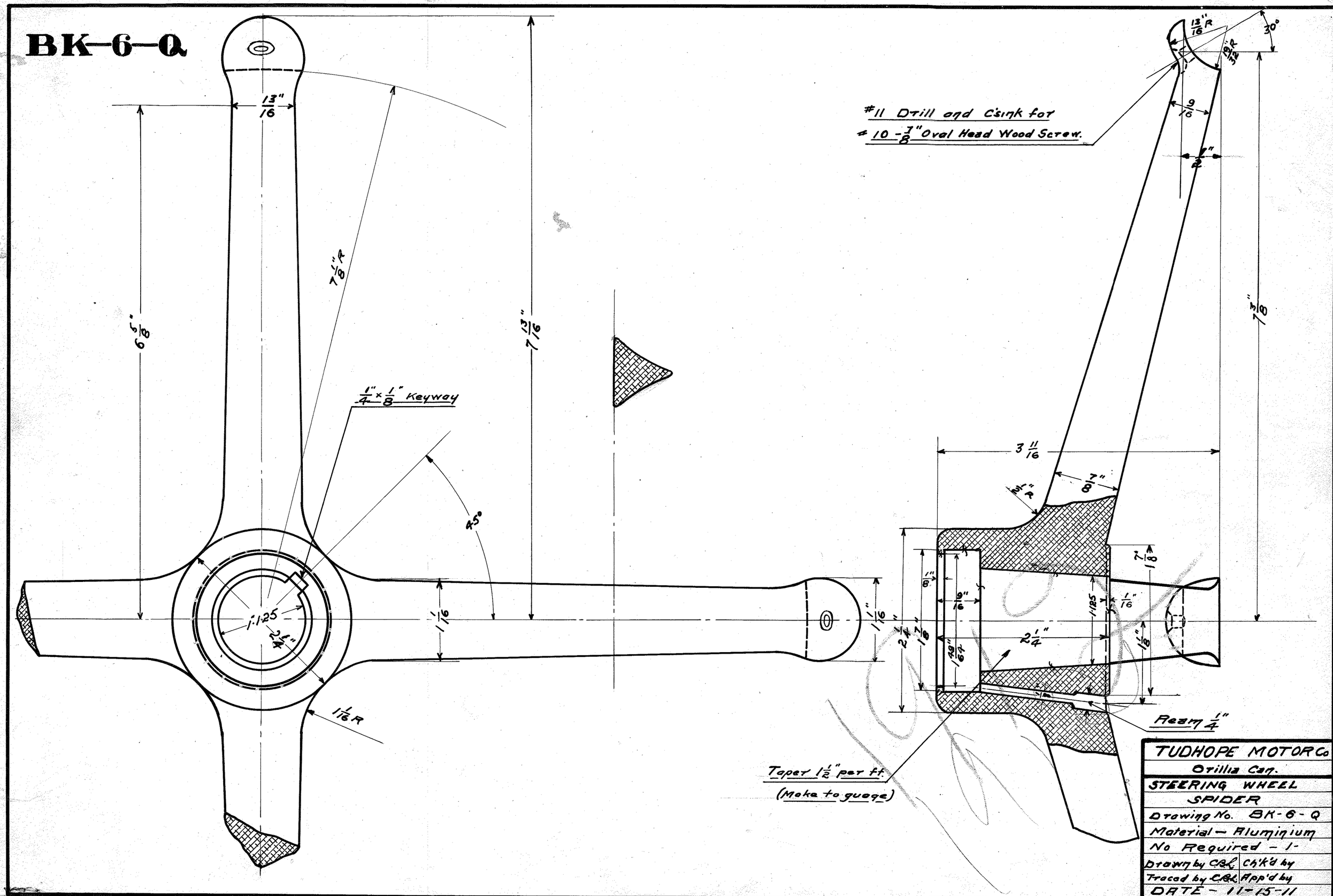

TUDHOPE MOTOR Co	
Orillia Can.	
STEERING WHEEL	
SPIDER	
Drawing No. BK-6-Q	
Material — Aluminium	
No Required - 1-	
Drawn by C.B.L.	Ch'k'd by
Traced by C.B.L.	App'd by
DATE - 11-15-11	